ASSA ABLOY has transitioned the formerly Yale Commercial brand to ASSA ABLOY ACCENTRA™. This affects only the brand name; the products and product numbers will remain unchanged.

Notes:

1. This template is an addition to the device template. Locate centerlines using horizontal and vertical references on device template.
2. Do not scale drawing.
3. Dimensions are in inches (mm).
4. LHR door shown. Preparation is typical for both door hands.
5. For door reinforcement see template 7400-0000.
6. Prepare mounting holes when installing the trim.
7. Provide adequate internal support to prevent door deformation after trim is bolted to the door.
8. At specifiers option ANSI A115.2 cutout thru door may be substituted. If type 161 stock doors are used a filler plate (by others) is required for the door edge.
9. Dimensions given about a centerline are symmetrical.

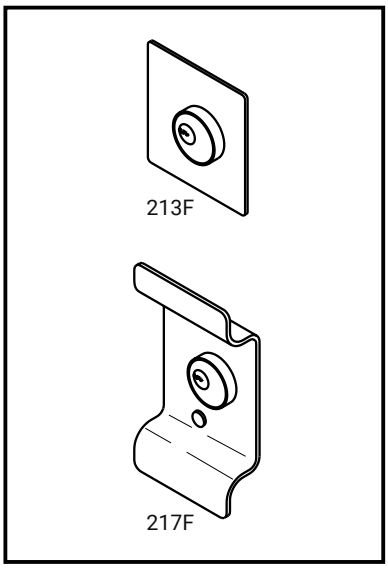

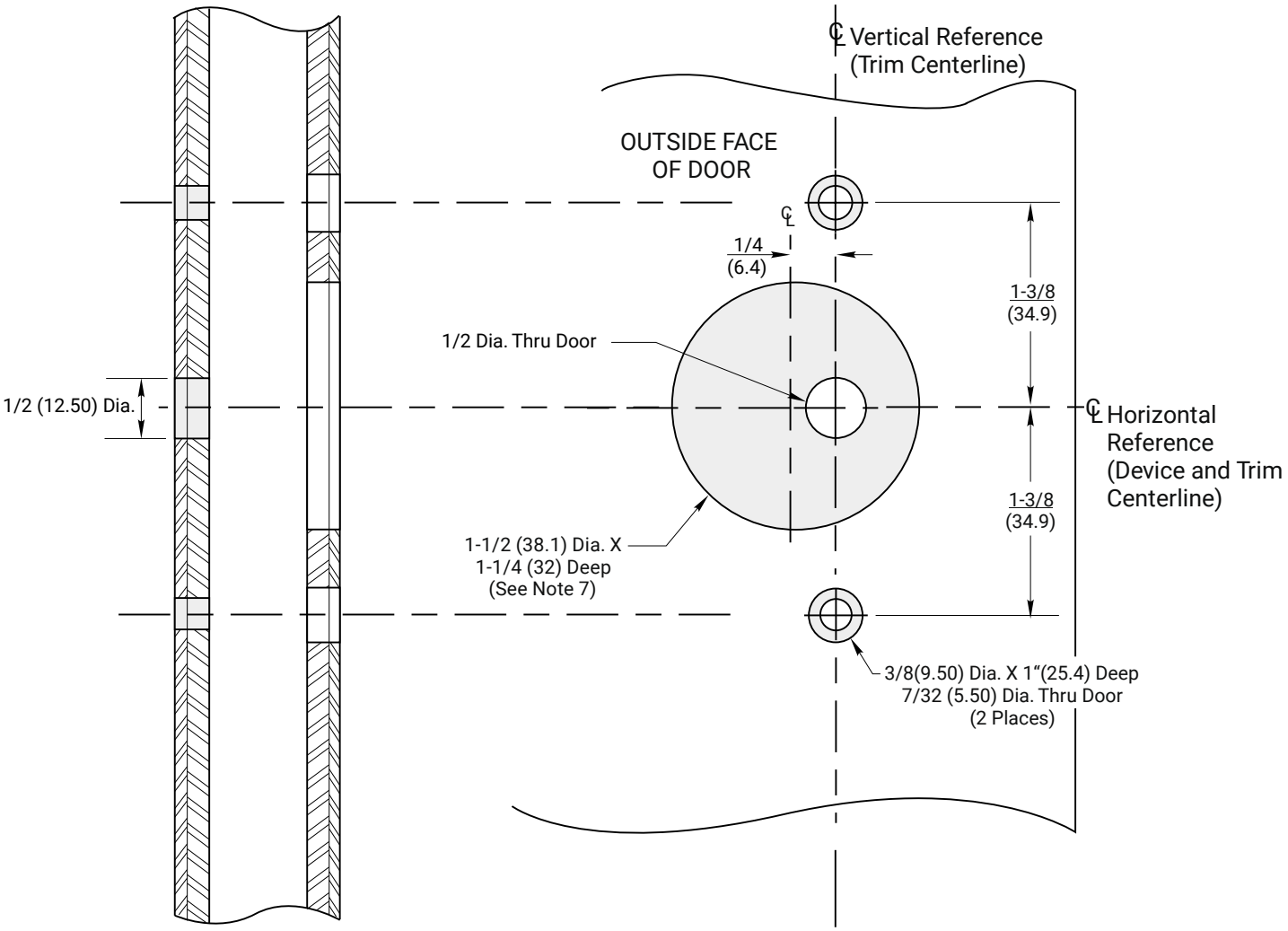

Section X - X

RESPONSIBILITY
DOOR AND FRAME MANUFACTURERS ARE RESPONSIBLE FOR PROVIDING ADEQUATE CONSTRUCTION OR REINFORCEMENTS FOR PROPER INSTALLATION OF HARDWARE SHOWN. ALL ARCHITECTURAL BUILDERS HARDWARE MUST BE INSTALLED ON PROPERLY REINFORCED DOORS AND FRAMES, REGARDLESS OF TYPE, MATERIAL, OR METHOD OF CONSTRUCTION.

213F and 217F Trim
Application for Metal Door
with 2100(F) Series Rim and Vertical Rod Exit Devices

1-855-557-5078 Ext. 2
www.accentra-assaabloy.com

ACCENTRA
ASSA ABLOY

Experience a safer and more open world

Copyright ©2024, ASSA ABLOY ACCENTRA™ Access and Egress Hardware Group, Inc. All rights reserved. Reproduction in whole or in part without the express written permission of ASSA ABLOY Access and Egress Hardware Group, Inc. is prohibited.

SUPERSEDES 7400-0213 02/24		DO NOT SCALE DRAWING
TEMPLATE NUMBER	SHEET	DATE
7400-0213	1 of 1	04/24